Stainless Road Stud

Code: VA-ES

A leader doesn't follow steps
... he marks the way

WHAT'S A ROAD STUD?

- This small device with reflective on the sides increases visibility on any lane or road. It doesn't matter if vehicles, trailer trucks, or pedestrians circulate there.

- It's part of the horizontal road signs placed on the pavement and is used to channel traffic, signal movements, make the drivers reduce speed, delimit lanes, etc.
  It's functional, modest, and practical since it doesn't distract drivers by taking their eyes out of the road but draws their attention with its reflective spheres.

- The reflective sides shine back at the headlights and taillights of the approaching vehicles; they are also highly resistant.

Features

- Made of stainless steel.
- It has 15 acrylic reflective metallic spheres; they can go on one or two sides of the road stud. It's perfect for confining or delimiting a lane or two-way roads; you can place them anywhere.
- It bears the passage of any vehicle without breaking or losing its shape.
- The materials and methods of manufacture are of long working life. It has the option of adding an ABS bolt for better concrete-gripping.
- Easy to install and maintenance-free.
- It has high resistance to wear and tear, friction, weight, humidity, and rain.
- The installation of road studs usually requires epoxy glue; this glue is highly resistant to temperature and physical and chemical agents. It has high adherence and long working life.

Stainless Road Stud

Code: VA-ES

Volumes, dimensions, and other measures are nominal and may vary by approximately 2%.

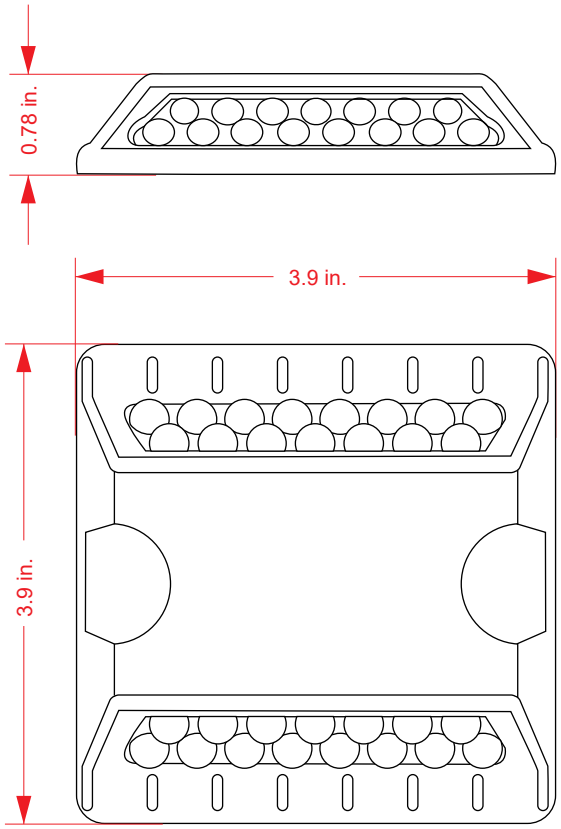

Measures

* **Manufacture of the body:**	Stainless steel
* **Manufacture of the reflective:**	Metallic acrylic spheres
* **Measures:**	Length: 3.9 in. Width: 3.9 in. Height: 0.78 in.
* **Filler:**	Epoxy mortar
* **Angle of inclination:**	30°.
* **Reflective surface per side:**	3.2 in^2
* **Useful contact surface:**	16 in^2
* **Pressure resistance maximum load:**	49,770 lb/in^2
* **Reflective color:**	Amber, white, red, blue or green

installation

The road stud installation is done by hand and mostly with epoxy glue.

- 1. The surface must be clean and dry. Mark the road stud distribution (every 10" in staggered formation).
- 2. Apply epoxy glue on the back of the road stud. Make sure it's completely covered, especially the corners (approx. 3.5 oz).
- 3. Put the road stud and press it. It doesn't matter that the glue pours out.
- 4. In case of adding a bolt, bore into a hole with a drill bit of ½" to a depth of 3". Remove any excess dust and continue on step 2.
- 5. Let it dry for approximately 2 h.

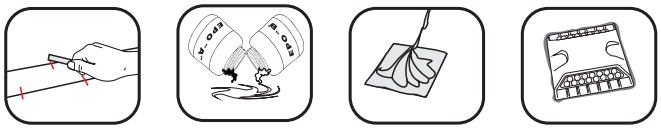

NOTE:

EPOXY GLUE PREPARATION:

MIX TOGETHER THE SAME AMOUNT OF THE "A" AND "B" FORMULAS.

STIR UNTIL YOU GET A HOMOGENEOUS MIXTURE.

ONCE YOU FINISH, GET RID OF THE REMAINING EPOXY GLUE SINCE IT'S OF ONLY USE.