# MULTI-IMPACT ATTENUATOR

Code: IM-130

A leader doesn't follow steps, he marks the way.

## WHAT'S A MULTI-IMPACT ATTENUATOR?

This impact attenuator is designed to bear a large number of impacts without needing maintenance or replacement.

The cushioning effect minimizes the vehicle damages at the time of impact and its base anchor makes it a safe and resistant crash cushion.

It includes a steel structure bolted to the floor and two triangular steel plates that grant it higher resistance, both are attached to its body through reinforced steel plates.

## Features

- It's composed of a flexible cushioning of Vitemflex® plates that have plates of different hardness, densities, and thickness. This combination achieves maximum cushioning, and the internal design creates cavities that work as airbags.
- Support structure: Hot dipping galvanized steel sheet.
- Floor-anchoring with a concrete footing of 1/2” rebars and reinforced concrete.
- Double-function protection:
  - * First and foremost, caring for people's safety by saving lives.
  - *And secondly, the protection and conservation of sign posts, electrical wiring, bridges, columns, etc.
- It includes a solar flashing lamp.
- It charges through direct sunlight: It works for 70 hours (flashing mode).
- Automatic: Lights up when it gets dark and it turns off during the day.
- Red LED.

# MULTI-IMPACT ATTENUATOR

Code: IM-130

Volumes, dimensions, and other measures and may vary by approximately 2%.

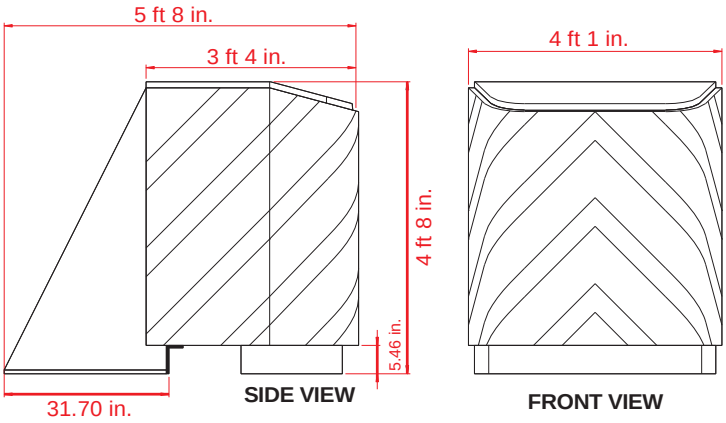


## Measures

| | |
|---|---|
| **Total** | Length: 5 ft 8 in.<br>Width: 4 ft 1 in.<br>Height: 4 ft 8 in. |
| **Reflective** | Engineer Grade Prismatic<br>(other grades of reflective upon request). |
| **Impact attenuator:** | Vitemflex® plates. |
| **Support structure:** | Steel plates. |
| **Steel treatment:** | Hot-dip galvanization. |
| **Floor-anchoring:** | Reinforced concrete footing with ½" rebars. |

## INSTALLATION

- Dig a hole of approximately 2 ft 11 in. × 33.15 in. × 23.40 in.
- Put the structure making sure that the three bolts are placed correctly.
- Pour the reinforced concrete taking care that the threaded rods of the bolts stay outside so you can put the nuts over them.
- Seven 1" nuts, flat washers, and flat spring washers.

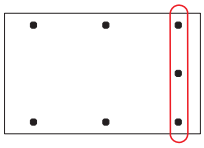

Reinforced concrete footing, the threaded rods of the three bolts need to be outside.

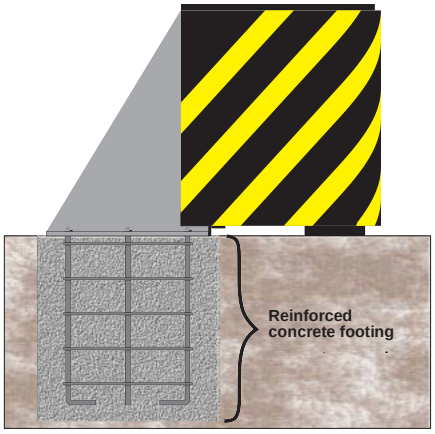


Floor-anchoring system