LUMINOUS ARROW BOARDS

CODES: FLE-15 / 18 To 25

Leader don´t follow steps
... marks the way

Lighten ARROWS for
On Road Works Signalisation

FEATURES

- Lighten arrows for On Road Works Signalisation are one of the most important signalisation instruments for avoid risks and accidents on roadways and in every construction site.
- Very useful and completely necessary in deviations, slopes, school zones, sport events, public and private constructions.
- Boards with 15, 18 and 25 signals.
- Ilummination red or amber.
- Fixed board or assembled.
- Sequenced or flashered.
- Electric grid, electronic, solar, generated or hibrid powered.
- INCLUDES ANTI-SALT & ANTI-CORROSION PROTECTION SYSTEM FOR MARITIME AND TROPICAL ZONES

- Simple Powered Feed
- Electric: directly feed from your utility provider grid (domestic connection)110V-220V.
- Electronic: With a 12v or 24v Converter for feed from an external battery. (DC12v/24V to DC127V)
- Solar: With Solar photovoltaic silicon cell panel (50 w) and long life battery.
- Rechargeable: Battery 12V-28AH guaranteed continous operation full charged.
- Special Powered
- Hibrid Powered: To-grid connection 110V/220V + Generator 127V-3000W + Solar Panel 240W-12V
- Battery bank 1500W-12V guaranteed operation for 24 hrs/365 days.
- Electronic by 3KVA generator (manual operation with starter rope). 15 lts. tank.
- Guarantee a minimum of 10 hrs operation with no gas recharge. 02.- Outlet connections. 01 Thermical Protection (20 and 30 AMP) with security connector (1/4 turn).

LITTLE-CAR SIGN SUPPORT (FIXED AND DISMOUNTABLE)

Structure:	Hollow tubular 2 ½" x 1 ¼" Cal. 18. Trolley wheels (fixed and swivel) 4 in.
Coating:	Finished in brilliant traffic yellow enamel (dry fast).
Measure:	Length: 70.86 in. Width: 39.93 in. Height: 58.66 in.

Security Sealed Metal Panel (anti-robbery)

Structure:	Hollow Tube Profile covered with dye steel carbon sheet Cal. 18.
Coating:	Finished in brilliant black enamel (dry fast).
Measure:	Length: 59,05 in. Width: 31.49 in. Height: 0.36 in.

WEIGHT: 67,24 LB.

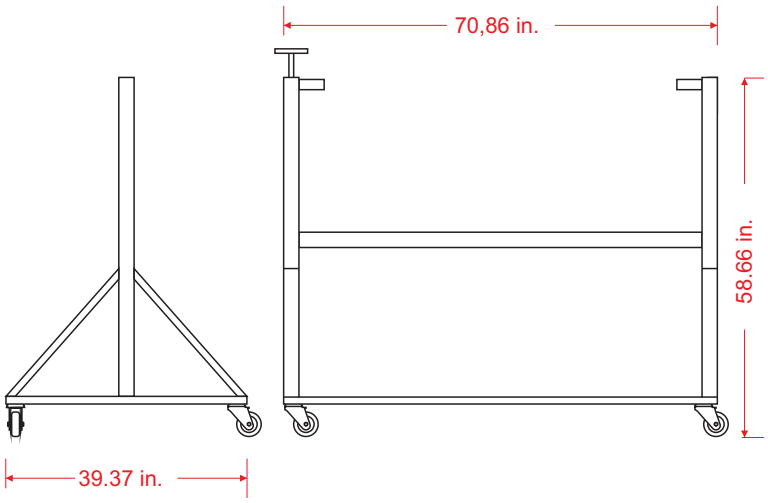

WEIGHT: 81,57 LB.

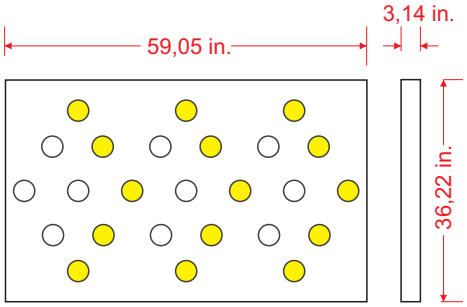

* **ELECTRIC ARROW BOARD (weight):** 148,81 LB.
* **SOLAR ARROW BOARD (weight):** Pendient

* **ELECTRIC ARROW BOARD (height):** 75,59 in.
* **SOLAR ARROW BOARD (height):** 84,64 in.

Illumination System

Luminous Modules:	15 led cluster in porta-led case, protection mica, butilic seal and required wired for direct installation (12v).
Ilumination colors:	Amber or red
Led´s life expectancy term:	100,000 hrs. (10 years)
Luminous intensity (1 led)	6.5 candels
Max visibility distance:	1,050 yd.aprox.

Sequences System

On road works sequences :	Intelligent system by control card with button panel allows up to 8 sequence in 4 different timing.
Construction works sequences:	Flasher System with a controller circuit by a button panel allows up to 3 sequences in 4 different timing.

Simple Powered Feed System

Electric: directly feed from a domestic outlet connector 110V-220V.
Electronic: With a 12v or 24v Converter for feed from an external battery 12V/24V.
Solar: With Solar photovoltaic silicon cell panel (50 w) and long life battery.
Rechargeable: Battery 12V-28AH guaranteed continous operation full charged.

Special Powered Feed System

- Hibrid Powered: Domestic Connection 110V/220V +Fuel Generator 127V-3000W + Solar Panel 240W-12V
- Battery bank: 1500W-12V guaranteed operation for 24 hrs/365 days of year.
- Electronic: by 3KVA generator (manual ignition with starter rope). 15 lts. tank.
- Guarantee a minimum of 10 hrs of continued operation with one fuel charge. /02.- Outlet connections./ 01 Thermical Protection (20 and 30 AMP) and with security connector (1/4 turn).

FLE-25-HIB
25 signals Arrow Board,
HIBRID FEED, red clusters,
fixed car.

FLE-25-SOL
25 signals Arrow Board,
SOLAR FEED, red clusters
fixed car.

FLE-15-SOL
15 signals Arrow Board
BI-DIRECTIONAL, SOLAR FEED.

FLE-15-ELEC
15 signals Arrow Board
ONE-DIRECTION, Electric feed,
red clusters, fixed car.

FLE-18-SOL

18 signals Arrow Board,
SOLAR FEED, red clusters,
dismountable car.

FLE-18-ELEC

18 signals Arrow Board,
ELECTRIC FEED, red clusters,
dismountable car.

Secure packed with carton, flex band and translucent polystrech.

Secure packed with carton and translucent polystrech.