# Toledo Bench

**Code:** BA-TO-2000M/BA-TO-2000P/BA-TO-2000L

- The **Toledo Bench** has integrated armrest on its lateral supports, with a design in esthetic curve lines is an attractive element for any urban furniture project.
- Lateral supports give it structure and resistance for a better service as a sitting bench in a park, garden or a school.
- Its main function is provide a good rest option to pedestrians in the day by day life, bettering the life quality and promoting a well use of any urban furniture.
- Also it works as a complementary ornament that bettered the urban heritage and its equipment, bettering in the same way, the town image.
- Manufactured with durable material, all weather resistant and also to the normal atrittion for exteriors use.
- Benches are composed on two main lateral supports and a central one that sustain the backrest and the seat.
- Both seat and backrest, can be made of three different materials:
- » Wooden board with maritime polyurethane finishing.
  - » Profile of plastic-wood.
  - » Steel dye cast cal. 12 and can carry your laser-cutted logo or any other message.

## FEATURES

- In its two sizes, the **Toledo Bench** can receive between three to five people sitting comfortably.
- Our benches offering elegance and ease, supporting other human activities like reading, friendly cohabitation in a neighborhood, promoting good family relationship or the simple place for rest during a journey.
- The benches supports are made out in 100% recycled medium density polyehtylene. The use of recycled materials helps environment and reduces the greenhouse effect gas emissions.
- Supports are enough strong to provide structure and stability to the bench.
- Materials used in a **Toledo Bench** guaranteed its all weather resistance.
- The device just need clean sporadically.
- Benches are anchored to floor with "ultrafix"screws cal. 3/8" x 5.9 in. and expansive polypropylene tackets "extralarge" cal. 3/4" x 5.51 in.

## RECOMMENDED USE

For installing in parks, central squares, all kind of public places because this for-people infrastructure can generate good coexistence between citizens. Is not the only reason, benches are heavy needed elsewhere.

# Toledo Bench

**Code:** BA-TO-2000M/BA-TO-2000P/BA-TO-2000L

All measures are in inches.

**Lateral View**

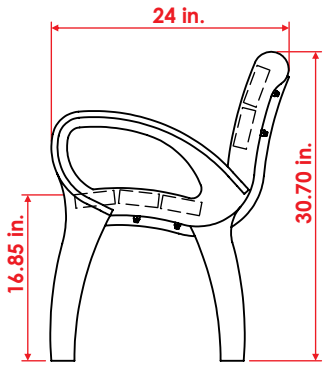


**Front View**

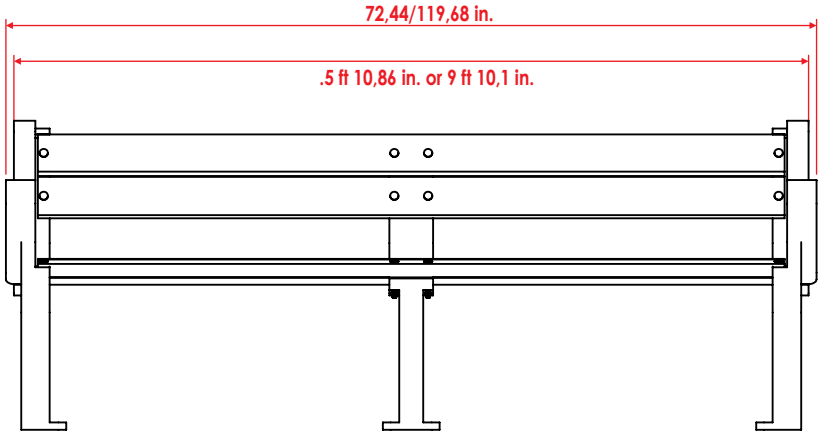


Measures are nominal and can vary, between +- 2%.

## Measure

Length: 70.86 or 118.01 in.

Width: 24 in.

Height: 30.70 in.

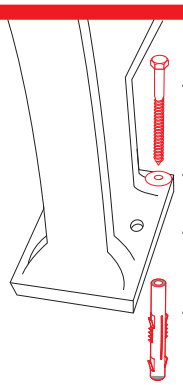

- *"Ultrafix"* screw hex head 21 t Ø 3/8" x 5.9 in.
- Washer
- Bench support base
- Tacket *"Extralarge"* Ø ¾" x 5.51 in.
- Auger to floor.

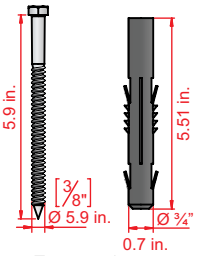


Front view